Chambord
FRANCE

Reference of the product: **E5400N0ST 009**
Name of product: **ANNE - NOIR**
Size of product (inch): **23 3/5" x 18 3/10" x 9 4/5"**
Code EAN : **3537390550770**
Photo:



Product data:		
TYPE OF SINK :	Farmer Sink	
POSITIONNEMENT :	Undermount	
MATERIAL : Chambord	European Fireclay with Porcelain Glaze	
Lenght & Width:	23 3/5"	18 3/10"
Apron Height:	9 4/5"	
	Drain Opening - Standard US 3.5 Inch Drain	
	Garbage Disposal Safe	
Bowl Depth:	21 3/10" x 16" x 9 1/10"	
Weight net:	54 Lbs	
Warranty (in years):	5	
Under cabinet:		

Due to the Nature of Earthenware Products Dimensions are Approximate +/- .5 Inch

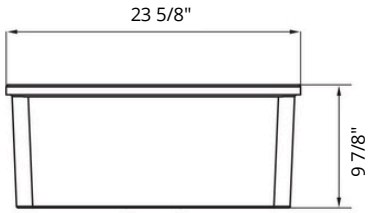

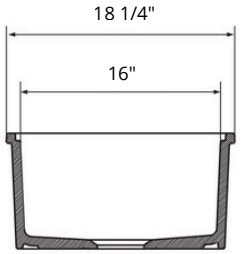

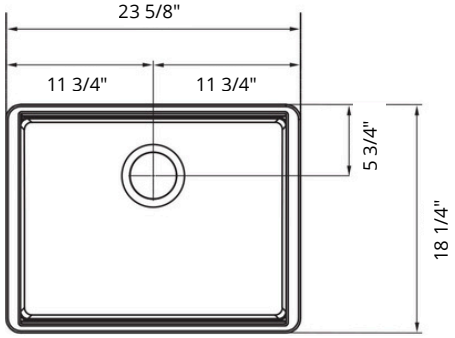

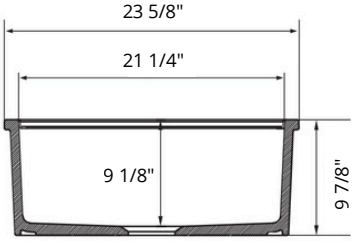

Optional items:



