Chambord
FRANCE

Reference of the product: **E5300N0ST009**
Name of product: **ANNE - NOIR**
Size of product (inch): **16 9/10" x 16 9/10" x 8 2/3"**
Code EAN : **3537390550732**
Photo:

Product data:		
TYPE OF SINK :	Farmer Sink	
POSITIONNEMENT :	Undermount - Apron Sink Base	
MATERIAL : Chambord	European Fireclay with Porcelain Glaze	
Lenght & Width:	16 9/10"	16 9/10"
Apron Height:	8 2/3"	
	Drain Opening - Standard US 3.5 Inch Drain	
	Garbage Disposal Safe	
Bowl Depth:	14 14/25" x 14 3/5" x 7 19/20"	
Weight net:	36 Lbs	
Warranty (in years):	5	
Under cabinet:		

Due to the Nature of Earthenware Products Dimensions are Approximate +/- .5 Inch

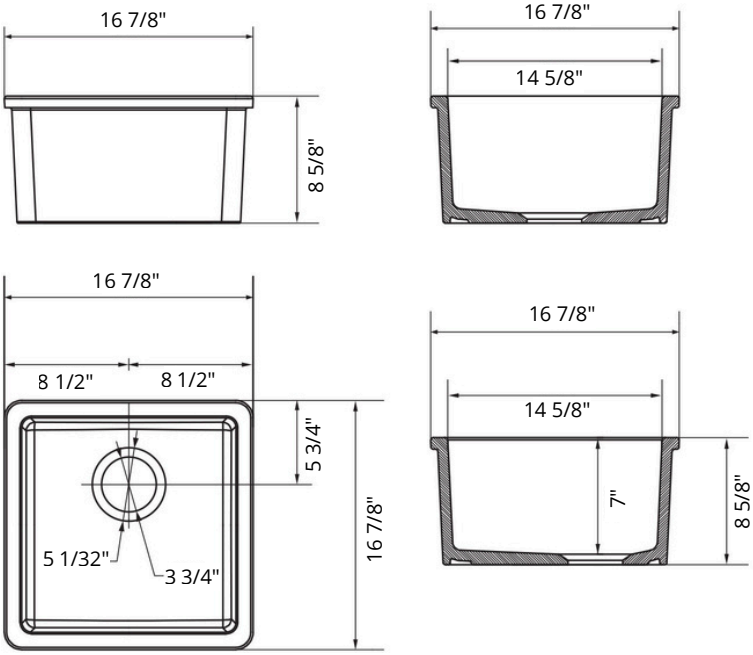

Optional items: