Chambord
FRANCE

Reference of the product: **E2825N0ST 006**
Name of product: **HENRI II LE GRAND WHITE**
Size of product (inch): **31 1/4" x 18 1/2" x 9 7/8"**
Code EAN : **3537390309835**
Photo:



Product data:		
TYPE OF SINK :	Farmer Sink	
POSITIONNEMENT :	Apron Sink Base	
MATERIAL : Chambord	European Fireclay with Porcelain Glaze	
Lenght & Width:	31 1/4"	18 1/2"
Apron Height:	9 7/8"	
	Drain Opening - Standard US 3.5 Inch Drain.	
	Garbage Disposal Safe	
Bowl Depth:	8 7/8"	
Weight net:	75 lbs	
Warranty (in years):	5	
Under cabinet:	**31 1/4"**	

Due to the Nature of Earthenware Products Dimensions are Approximate +/- .5 Inch

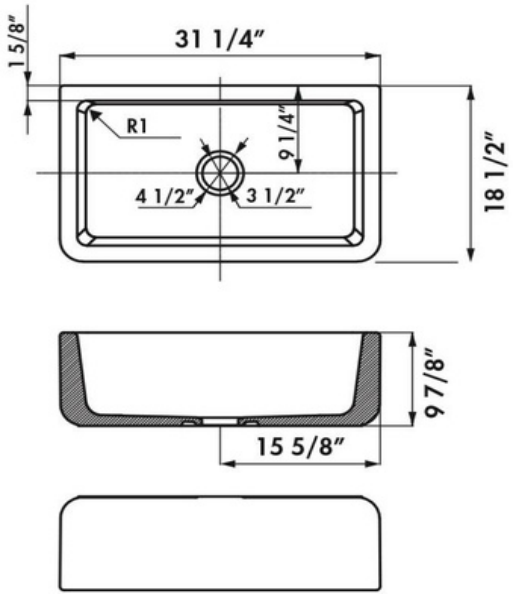

Chambord
FRANCE

INSTALLATION GUIDE



STOP ATTENTION (PLEASE READ)
This product requires a professional installation and custom cabinetry. This product can not be installed in a normal sin base cabinet without radical customization. A custom sink base is recommended and can be ordered from your kitchen design specialist.

Please observe all state and local building and plumbing codes.

NO TEMPLATE INCLUDED
A cutout template is not provided with apron sinks, due to the varied cutout sizes that are possible based on your preferences. Use the actual sink to determine the location of the cutout. **WARNING**
Before installation, please inspect your product for any damage that may have occurred during shipping. Ifthe product was damaged in the shipping process or your product needs to be returned for another reason, it must be in the original packaging. If the product is not returned with the original packaging you may not be eligible for a refund of the purchase price. Return fees may apply. Please contact your dealer for more information.

NEW INSTALLATION
When preparing for installation, it is recommended that you consult with your countertop fabricator as to your installation preference. When the fabricator is preparing the template for installation, a ¼" overhang is recommended to provide a clean transition from countertop to sink. The overhang will hide any sign of the silicone adhesive.

INSTALLATION PREFERENCE
FLUSH MOUNT: The countertop is flush with the sink.
OVERHANG: The countertop is positioned over the sink bowl by a set amount.

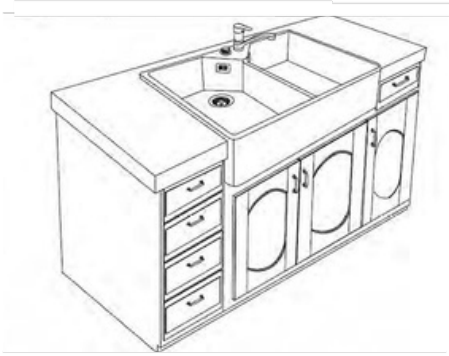

STEP 1
APRON CABINET PREP
Measure the actual size of the sink being installed to determine cabinet opening dimensions and support frame location. The cabinet opening should equal the maximum dimensions of the sink to ensure a minimum gap between the sink apron and the cabinet. Please be advised that the apron has finished sides to allow for the apron to overhang the front fascial of the cabinet. The overhang measurement is to customer preference.
To prepare the cabinet create a support frame inside the base that the sink will sit upon.
Use 2x4 solid wood studs to create the support frame. The frame should be strong enough to hold up 300 lbs of weight once installed. The support frame should be positioned so that the top of the sink rim is level and flush with the surface of the cabinet perimeter. Make sure that the support frame leaves room for the drains, faucet, water lines and if there is one, a garbage disposal.

STEP 2
FINE MEASURING
After the installation location preferences have been determined. It will be necessary to custom scribe the apron cabinet sides or if needed, to add wood filler strips.
BE ADVISED

Fireclay aprons have nominal dimensions. The apron will have up to a ¼ taper. When measuring, be aware that the apron rim measurement is longer than the base.
Stainless steel aprons have nominal dimensions and have the risk of being scratched in the installation process.

SINK MOUNTING
Place a thin layer of sealant on the supporting frame where it will come in contact with the sink. Gently position the sink on the frame. Make sure the sink sits level and sturdy on the frame. Check that the top surface of the sink is level and flush with the top of the cabinet rim. Be sure that there is adequate space behind the sink for any faucet, accessories, and backsplash.

STEP 3
FABRICATION
Trace the cut-out opening on the countertop. Cut out the opening in the countertop. Use and orbital sander to smooth the edge of the cut out area and remove all saw marks. If cabinets are laminate, and exposed unfinished cut outs must be sealed to prevent water damage**. If using a countertop fabricator, they will make an appropriate template. They will then fabricate and install the countertop.**

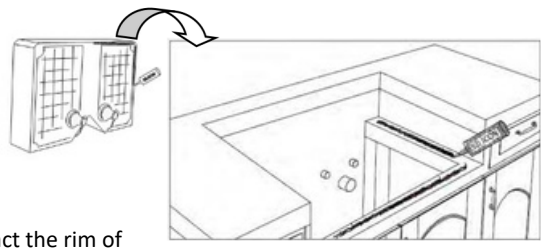

INSTALLATION
Clean the rim of the sink and the underside of the countertop where the sink will contact the rim of the sink. Apply a generous bead of sealant around the sink rim.
COUNTERTOP
Gently position the countertop on the sink. Ensure that the sealant provides a complete seal between the countertop and sink. Wipe off any excess sealant using a wet cloth. Apply extra sealant where there are any gaps.